P20G SEPARATOR

LUMEL
EVERYTHING COUNTS

Features:

PD14 compatible

eCon

Y=a*x+b Individual characteristic

Inputs:

DC

-20...20 mA

-10...10 V

Outputs:

-20...20 mA

-10...10 V

Galvanic isolation:

Sup.

PD14 interface

- Full galvanic isolation of the input, output and supply.
- Matching of analog signals in automation systems.
- Fully configurable through the PD14 programmer. By means of the programmer, one can change the input type, output type, measurement averaging time and recalibrate the analog output according to the output individual characteristic.
- Small dimensions.
- 0.2 accuracy class.

Example of Application

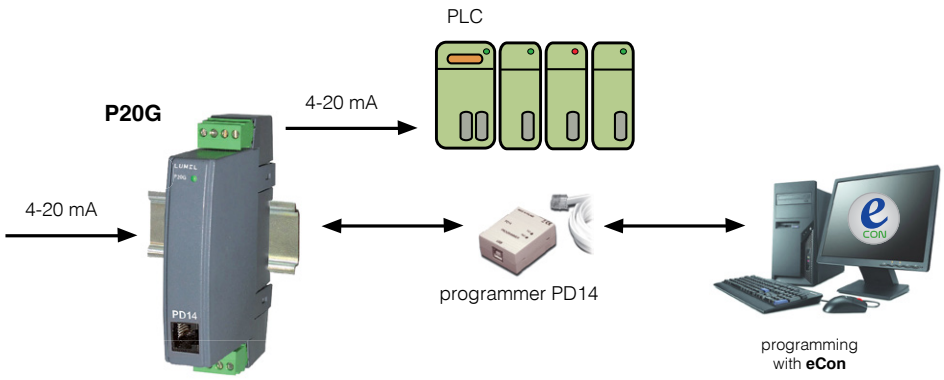

Separation between PLC analog inputs

Inputs

Input:	Measuring range:	Parameters	Overloads	Error
Current: -20...20 mA	-20...20 mA; -5...5 mA; 0...20 mA 0...5 mA 4...20 mA	Resistance: 12 Ω ± 1%	Short duration overload: 5 In Sustained overload 1.1 In	Conversion class: 0.2
Voltage: -10...10 V	-10...10 V; -5...5 V -1...1 V 0...10 V 0...5 V 0...1 V	Resistance: > 1 MΩ	Short duration overload: 5 Un Sustained overload 1.2 Un	

Outputs

Output kind	Properties	Remarks
-20...20 mA	$R_{load} \leq 500\ \Omega$	Conversion class: 0.2
-10...10 V	$R_{load} \geq 500\ \Omega$	

External Features

Weight	< 0.125 kg	
Dimensions	22.5 x 120 x 100 mm	
Protection grade (acc. to EN 60529)	ensured by the housing: IP 40	from the terminal side: IP 20
Fixing	on a 35 mm rail	acc. to EN 60715

Export department:
+48 68 45 75 139/ 321/ 368
Fax: +48 68 32 54 091
e-mail: export@lumel.com.pl

LUMEL S.A.
ul. Sulechowska 1
65-022 Zielona Góra
POLAND
WWW.LUMEL.COM.PL

Controlin BV -+31 (0)180 33 05 22 - sales@controlin.nl - www.controlin.nl

P20G SEPARATOR

Rated operating conditions

Supply voltage	85...253 V d.c./a.c. (45...65 Hz) or 20...85 V d.c., 20...65 V a.c. (45...65 Hz)	power consumption: < 2 VA
Temperature	ambient: -20...23...55˚C	storage: -25...85˚C
Relative humidity	≤ 95%	inadmissible condensation
Operating position	any	
Preheating time	10 min	
Averaging time of the measurement	≥ 0.1 s	
Response time of the separator	≥ 0.1 s	

Safety and compatibility requirements

Electromagnetic compatibility	Noise immunity	acc. to EN 61000-6-2
	Noise emissions	acc. to EN 61000-6-4
Isolation between circuits	supply - input 2.21kV a.c./ 3.1kV d.c. supply - outputs 2.21 kV a.c/3.1kV d.c. input - output 1.35kV a.c./ 2.0 kV d.c.	acc. to EN 61010-1
Pollution grade	2	
Installation category	III	
Maximal phase-to-earth operating voltage	for the supply circuit: 300 V (version: 230 V)	
	for the measuring input: 50 V	
	for the output: 50 V	
Altitude above sea level	< 2000 m	

Connection diagrams

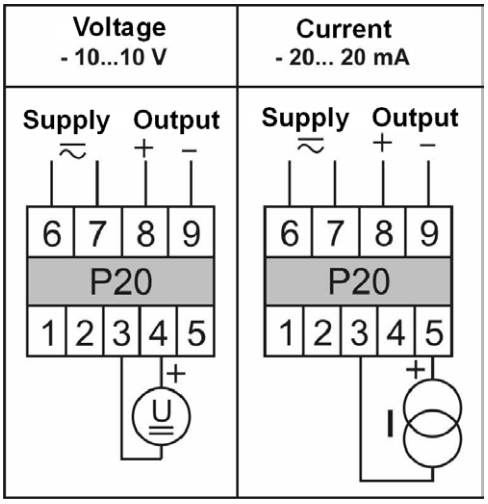

Electrical connection diagram of the P20G separator

Ordering

Table 1. Ordering codes:

	P20G -	XX	XX	X	XX	X	X
Input:							
kind of programmed input: see table 2		XX					
Output:							
kind of programmed output: see table 2			XX				
Supply:							
85...253 V a.c./d.c.				1			
20...85 V d.c., 20...65 V a.c.				2			
Version:							
standard					00		
non-standard settings					NS		
custom-made*					XX		
Language:							
Polish						P	
English						E	
other*						X	
Acceptance tests:							
without extra quality inspection requiremnts							0
with an extra quality inspection certificate							1
acc. to customer's request*							X

Table 2. Coding of the P20G separator kind of input and output

Range	Input code	Output code
0...1 V	01	01**
0...5 V	02	02
0...10 V	03	03
±1 V	04	04**
±5 V	05	05
±10 V	06	06
0...5 mA	07	07**
0...20 mA	08	08
±5 mA	09	09**
±20 mA	10	10
4..20 mA	11	11
Custom-made version*	XX	XX

* - after agreeing with the manufacturer
** - conversion class > 0,2

Order example:
The code **P20G - 08 06 1 00 E 1** means:
P20G - Separator of analog signals (U d.c. and I d.c.)
08 - kind of programmed input: 0...20 mA
06 - kind of programmed output: ±10 V
1 - supply voltage: 85...253 V a.c./d.c.
00 - standard version
E - English language
1 - with an extra quality inspection requirements

For more information about LUMEL's products please visit our website: www.lumel.com.pl

Export department:
+48 68 45 75 139/ 321/ 368
Fax: +48 68 32 54 091
e-mail: export@lumel.com.pl

LUMEL S.A.
ul. Sulechowska 1
65-022 Zielona Góra
POLAND
WWW.LUMEL.COM.PL

Controlin BV -+31 (0)180 33 05 22 - sales@controlin.nl - www.controlin.nl